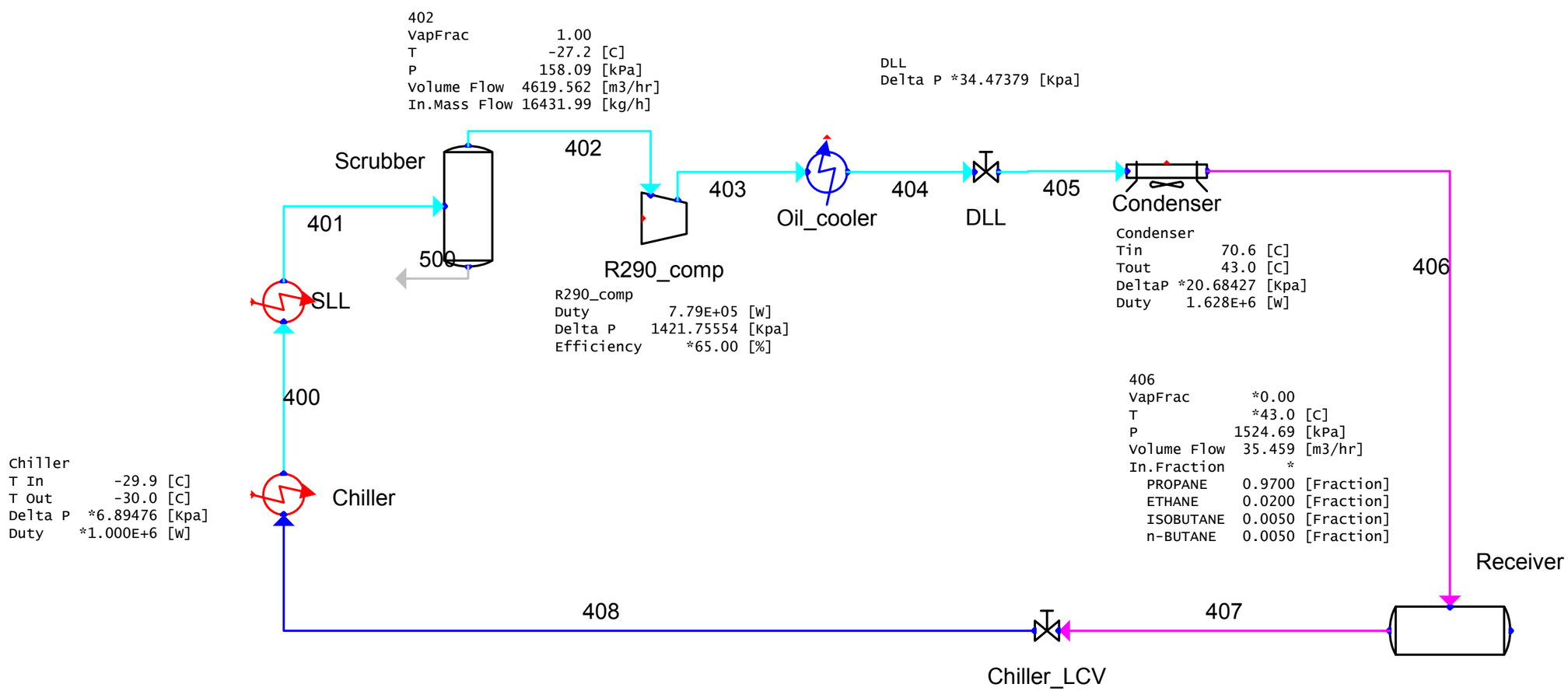Refrigerant : Commercial Propane
1 MW Chiller duty, 43C condensing, -30C evaporating
REV 0